New REMINGTON AUTOLOADING TRAPS

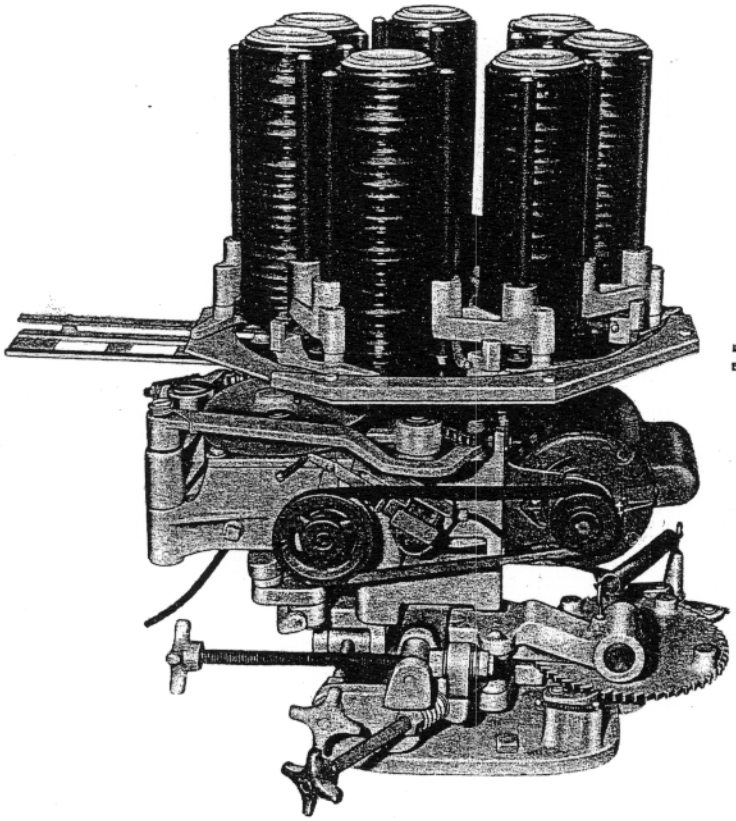

MODEL A100T
FOR TRAPSHOOTING

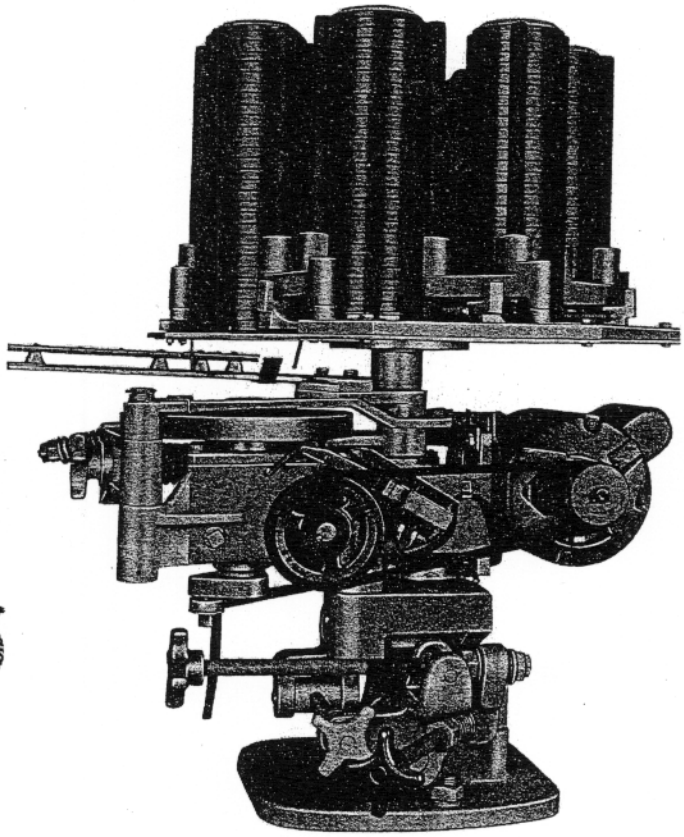

MODEL M200S
FOR SKEETSHOOTING

THESE REMINGTON AUTOLOADING TRAPS PAY FOR THEMSELVES IN LABOR SAVINGS!

Dial type auto-angling base provides many different horizontal angles for trap shooting! Low, compact target magazine is ideal for close-to-the-ground trap houses. New air control stabilizer eliminates trap vibration.

Entire operating cycle is performed automatically. Extra large magazine holds 203 "Blue Rock" targets . . . two traps installed on one skeet field provide more than enough targets for three five man squads . . . without reloading.

Check these Outstanding Features of the New Remington Autoloading Trap!

BIG SAVINGS IN LABOR

Gun clubs will find that this Remington Autoloading Trap will pay for itself in a short time because it eliminates the need for trap boys in skeet and straight trap shooting. Both Models 100T and 200S place targets on throwing arm and cock traps automatically. (Trap "doubles" event requires manual loading of second target.)

MODELS FOR TRAP AND SKEET

The Remington Autoloading Trap Model 100T provides an unpredictable number of angles of target flight with special dial type auto-angling base. Trap automatically changes target direction sequence so that shooters can't memorize angles.

Model 200S with solid base throws targets at constant speed . . . perfect for skeet shooting. Walk-around release unit permits instructor or referee to operate both high and low house traps from any position on skeet field. No "puller" necessary.

EXTRA LARGE TARGET CAPACITY

Rotating loading magazine contains seven columns with a total capacity of 203 "Blue Rock" targets . . . more than enough for a five man squad to shoot a round of straight trap or three rounds of skeet (with Remington Autoloading Traps in high and low houses.)

EASY LOADING

Loading from top of each column in magazine is fast and effortless. For best results load four to six targets at a time.

STANDARD 110 VOLT POWER SUPPLY

Both trap and skeet models may be connected to a regular 110 volt wiring system. Simply connect the wires . . . all-electric Remington Autoloading Traps do the rest of the work.

EXCLUSIVE "FLIGHT CONTROL"

Three easy-to-reach, color-coded, operating handles give you separate, finger tip adjustments for elevation, windage and tilt of target.

No tools are necessary. Twist of the wrist "Flight Control" enables you to correct target flight in seconds!

OPEN CONSTRUCTION — EASY ACCESSIBILITY

Construction is uncomplicated, design is neat, functional. All moving parts are out in the open where you can get at them . . . no bulky hoods or covers to remove.

Installation of the Remington Autoloading Trap is not difficult; no special skills are required.

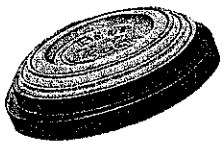

THE REMINGTON AUTOLOADING TRAP INSTALLATION

The most desirable location for skeet or trap shooting is a level piece of ground with an unobstructed background so that the flight of targets is clearly visible. If at all possible, shooting should be toward the north or northeast. The location of the field should afford the greatest safety and should provide a safety range of 300 yards along the line of target flight. A complete set of detailed drawings for the layout of skeet or trap fields will be found in pocket in back of this catalog. These drawings include the construction of trap houses and the foundations for the traps.

WALK AROUND RELEASE

POWER CONTROL SAFETY RELEASE

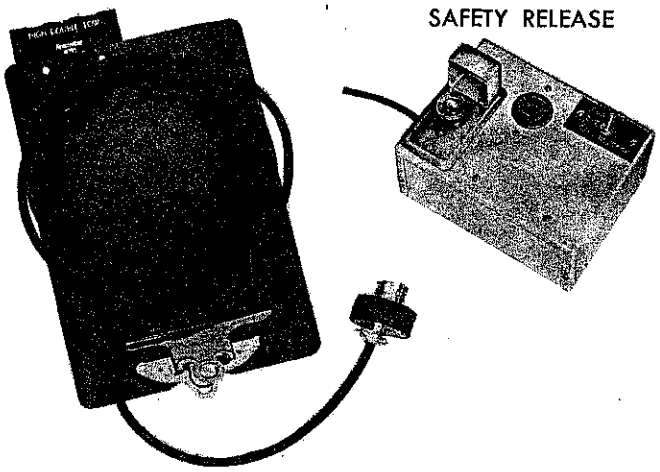

FOR SKEET SHOOTING

The complete Skeet outfit includes the following:

- **2 Model M200S Autoloading Traps**
- **1 Electric walk-around release with 80 feet of wire***
- **2 Low-voltage power control boxes with fuses**
- **1 Connection box** **Gross Wgt. 600 Lbs.**

*The electric walk-around release is particularly advantageous at registered shoots since the referee, with the squad, is able to release the targets himself. This not only insures faster, more positive releases, but it also eliminates the need for an additional man to act as "puller."

FOR TRAP SHOOTING

The complete Trap outfit includes the following:

- **1 Model A100T Autoloading Trap with Auto-angling Base**
- **1 Electric Release with 100 feet of wire**
- **1-Low-voltage power control box with fuse**

Gross Wgt. 330 Lbs.

REMINGTON AUTOLOADING TRAP ASSEMBLY AND OPERATION FOR SKEET SHOOTING

Assuming that the trap house has been completed as per blueprint and instruction sheets, the trap may be easily assembled and installed. The skeet shooting outfit comes to you in two crates. Assembly Procedure is as follows:

1. To uncrate Trap
   a. Remove four ¼″ dia. x 6″ long bolts located in each lower corner of crate through crate into 4″ x 4″ skids.
   b. Lift upper part of crate straight up, being careful not to damage magazine which will still be intact inside of the upper part of the crate.
   c. Remove 1″ x 4″ cross brace from upper part of crate and take out magazine. *Do not allow magazine to fall.*
   d. A key will be noted on the shaft. In reassembling be sure the key is in place and in line with the slot in the magazine hub. Note that magazine will not settle in place until the target control finger is depressed inside of the cam on the right side of the magazine plate.
2. In removing crating, trap will be found bolted to the lower part of the crate.
3. Unscrew nuts permitting trap to be moved (keep bolts and nuts).
4. Lift trap into house and onto platform.
5. Bore two ⅝″ holes as indicated on drawings 1, 2, 3 or 4 depending on type of construction desired. This is for Model M200S Skeet Outfit. See Drawing #5 for Model A100T regulation trap.
6. Put bolts from the packing crate through base and platform. Secure both tightly.
7. Connect trap motor to power control box.
8. For the proper operation of the Model M200S Trap, the wiring system must provide a minimum of 110 volts AC when the motor is started under full load. (Peak current 15 amps per trap.)

POWER CONTROL-SAFETY RELEASE

The Power Control — Safety Release Box (part No. 3505A) should be located so that it is accessible from the outside of the trap house . . . in a position where the operator can reach it without exposing himself to the front of the Remington Autoloading Trap.

Located on the Power Control Box is a double pole—double throw switch. The "up" position of the switch is "on" and at this setting, the trap is in operation and ready to throw targets. To insure safe operation, the switch should be put on "up" position *only* when operator is outside the trap house.

Before entering the trap house, throw the switch to the middle position which is "off." When trap motor has stopped running, press toggle on switch to "safe release" position for about ½ second. This releases the throwing arm and prevents any unexpected movements of the trap while it is being loaded.

OPERATION

The new Remington Autoloading Trap is fully autoloading and is designed to eliminate many of the inherent difficulties found in other types of traps. This trap is built and tested to specifically handle Remington "Blue Rock" targets. Other brands of standard targets manufactured for clay target shooting will also function satisfactorily when thrown from this trap.

The Model M200S Skeet Trap can be changed to the auto-angling type.

You will need the following parts:

Step 1. Auto-angling base assembly complete

Step 2. New Carrier

Step 3. Spring clip to be located underneath the magazine plate to the right of the target positioning finger for holding second target in place when throwing doubles.

LOADING

Loading is fast and effortless. A dial type magazine containing seven loading chambers is easily accessible from the top of the trap. When filling the chambers with clay targets it is necessary to position bottom targets on the magazine plate. Before loading magazine, targets should be inspected for cracks. For better inspection roll targets in hand four to six at a time. Operate magazine lever (E—see plate 1) manually to allow bottom targets to rest flat on magazine plate. Do not allow magazine to run below 3 targets per chamber before reloading magazine.

REMINGTON TARGET "FLIGHT-CONTROL"

The trap itself is now assembled, installed and ready for operation in the high or low house but is not adjusted. Before making the following adjustments, set Windage Control (green) Control Rod with ⅝″ of control rod extending through control pivot. Then proceed as follows:

If target is going too far to the right (or left), loosen the two hold-down bolts and turn the entire trap toward the left (or right) until the target passes over a point which is in direct line with Station 4 and 8, and six yards outside of Station 8. This target, barring wind, must pass within 3 feet of a spot fifteen feet over this point and carry to a distance equivalent, on level ground, to 55 to 60 yards from the trap house from which it was thrown.

"FLIGHT-CONTROL" ADJUSTMENTS

After the above basic setting of the trap has been completed, future adjustments are made simply, quickly with the exclusive "Flight-Control" system. The exclusive Remington Target "Flight-Control" provides finger-tip adjustments for elevation, windage or tilt by means of three easily accessible operating handles located on the right-hand side of the trap. These handles are color coded for identification. Red for elevation. Green for windage and Yellow for tilt.

The path of the target can be directed with finger-tip precision in the following manner:

ELEVATION: Target too low. Turn red handle clockwise. Target too high, turn handle in opposite direction.

WINDAGE: Target too far to right, turn green handle clockwise. Target too far to left, turn same handle in opposite direction.

TILT: Target curls in flight. Turn yellow handle clockwise or counterclockwise (whichever is necessary) until curl is removed.

LENGTH OF TARGET FLIGHT

The speed of a target is directly proportional to its distance flight. To adjust the speed of a target, first use Power Control-Safety Release to trip target carrier, thus removing tension on spring before working on trap.

To adjust speed of target, loosen jam nut (A) in front of cocking arm on main spring by adjusting screw (See Figure A. Adjust by turning hand knob (B) in or out. After length or speed of target has been adjusted, tighten lock nut (A) *against throwing spring plug.* (For parts A & B see illustration.)

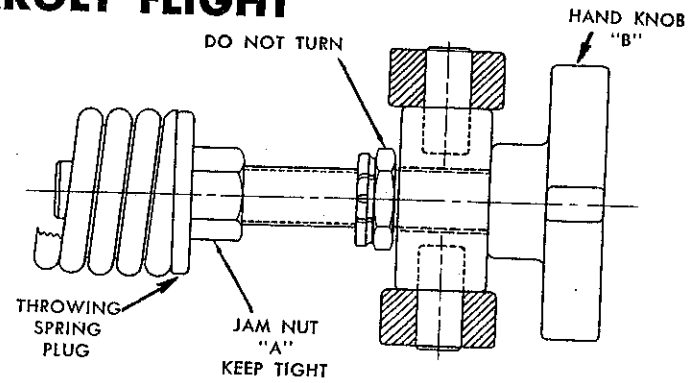

FIGURE A

REMINGTON AUTOLOADING TRAP ASSEMBLY AND OPERATION FOR TRAP SHOOTING

Assembly of the Remington Model A100T Autoloading Trap for trap shooting follows steps 1 through 4 of assembly for skeet shooting. Procedure from Step 4 above is as follows:

5. Drill holes ⅝" diameter as shown in illustration on Drawings #5 and #6 in back pocket of catalog.
6. Base of trap should fit in recessed area of concrete pier.

TARGET FLIGHT ADJUSTMENT FOR A100T

ELEVATION

Trap elevation is controlled by Red "Flight-Control" handle. This control is self-locking at any position.

LEVEL

To remove curl from flight of single targets or to equalize the elevation of left and right angle double targets, turn yellow "Tilt-Control" handle and tilt the trap slightly away from the direction of curl.

DISTANCE

Before adjusting the trap for distance, use the Power Control-Safety Release to completely inactivate the moving parts of the trap.

To adjust distance loosen jam nut (A) in front of cocking arm on throwing spring screw. Adjust by turning hand knob (B) in or out. After length or speed of targets has been adjusted tighten jam nut (A). Failure to lock jam nut will cause diminishing speed of targets and main spring will cause extra noise from hitting side of gear box, also injury to the main spring adjusting screw threads. (for parts A & B see illustration above).

50 yds. Distance of targets should be adjusted so that targets will light [redacted] to [redacted] yards from trap house, 8 to 12 feet in height with 9 to 10 feet preferably.

This height is determined 10 yards in front of trap.

FLIGHT ANGLES

After making initial windage adjustments with the trap's hold-down bolts (details on page 4) it is necessary to allow for target spread. In setting spread, right hand target must be set first, as it cannot be changed independently of left hand target. Turn ratchet wheel (part No. 601) counterclockwise so that tallest spud on ratchet wheel, and ratchet wheel pivot are in a straight line with point of contact on bumper (part No. 3901) (See Figure B). This places trap in the extreme right position. Turn green "Flight-Control" handle to determine the finer adjustment of left or right windage of target.

The spread is controlled on the left by the angle adjusting screw. To increase spread of left hand target, back off the screw. To decrease spread, advance the screw.

DOUBLE TARGET ADJUSTMENTS

To throw double targets, first release throwing arm (part No. 3603) by using Power Control-Safety Release. Increase the throwing spring pressure by about six turns of the throwing spring hand knob (part No. 4203). Lock out the pawl (part No. 606) that drives the auto-angling device, using the pin in the lever (part No. 602) below the pawl and put trap in full left position. Now load a second target by hand, pushing the second target under the clip on the magazine plate until it rests against rear target stop part No. 1312.

Targets may be levelled by tilting the trap to the left using the yellow knob. Targets may be centered by the green "Flight-Control" knob.

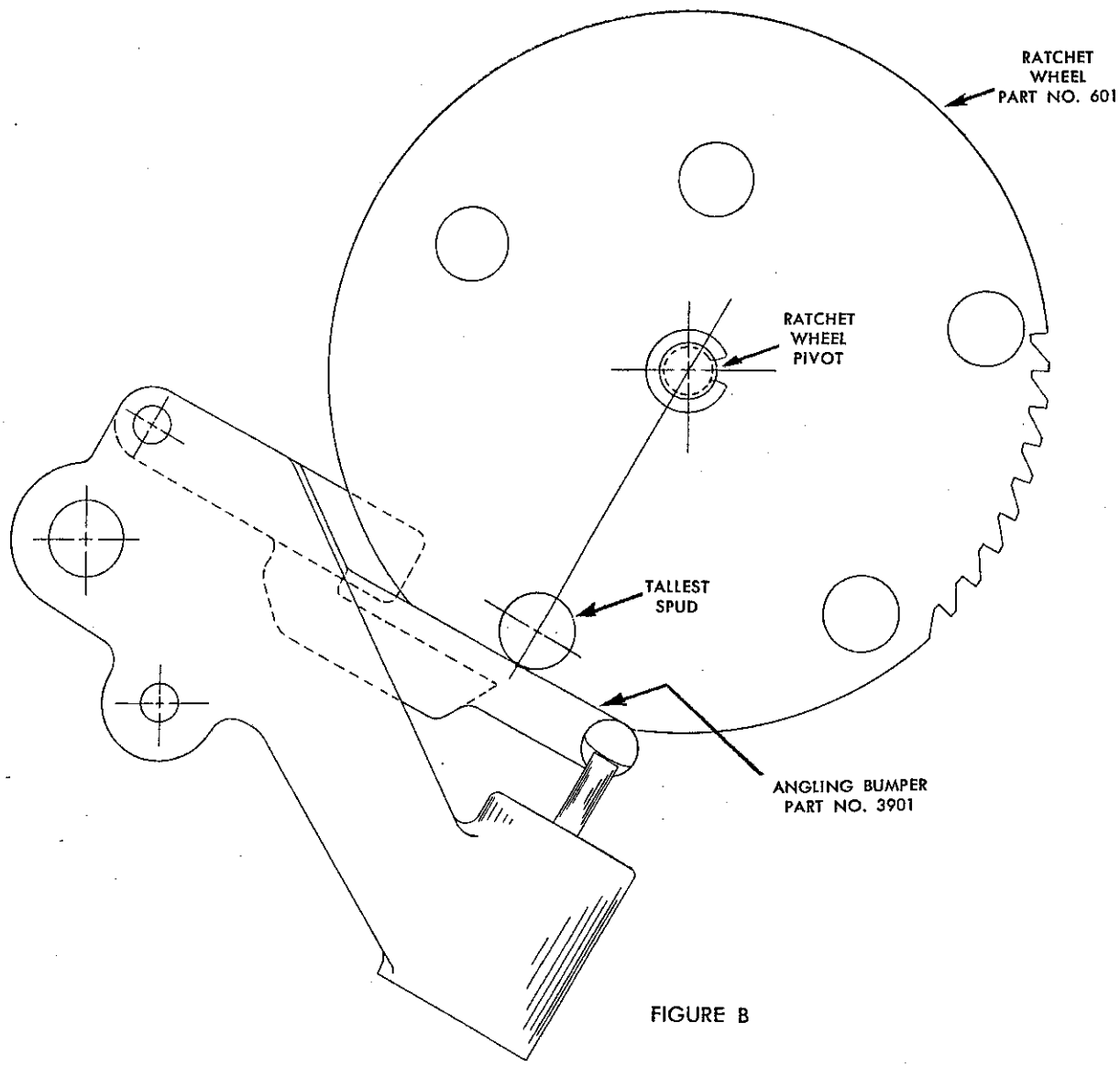

FIGURE B

MAINTENANCE

LUBRICATION

Check lubriplate #105 after each 50,000 targets. Remove filler plug — (R plate 2) lubriplate should be *UP TO* gear on clutch cup. *Do Not Over Lubricate. Too Much Lubriplate Will Cause Clutch To Slip.* Symptoms —slow-delayed releasing, slow cocking—*To Correct*—

1. Elevate trap to level position.
2. Remove magazine assembly — Part #4301-A.
3. Remove magazine plate Part #2401 — by loosening lock nut & stud screw — Part D (plate 1). Lift plate up and remove from magazine shaft. Do Not Lose Key On Hollow Shaft. On underneath side of magazine plate, note front and back target stops. Do Not store where these two stops will become damaged.
4. Remove two ⅜″ x 1¼″ cap screws from carrier or throwing arm and store in safe place — cast aluminum will break under undue strain.
5. Remove safety-catch on repair link where it is attached to relatching arm front end.
6. Remove E ring (U plate 2) and relatching arm return spring (U-1 plate 2). Remove relatching arm (U-2 plate 2).
7. Remove ⅛″ x 2″ roll pin (W-1 plate 3) from cocking cam, this will allow removal of cocking cam (W-5 plate 3). *Note:* Remove Woodruff key from clutch and gear shaft.
8. Remove latch spring (T-2 plate 3).
9. Remove latch (T plate 3).
10. Remove part (T-3 plate 3) — Allen head latch stud.
11. Remove ⅜″ cap screw, (part W-2 plate 3) from right side of gear box cover. This cap screw also holds drive belt and Solenoid Safety Guard to trap.
12. *Note*—3 drive pins that are visible. *Gently* "pry" off gear box cover (W-3 plate 3). These pins will remain in gear box.
13. Rotate clutch, assembly by hand with drive belt until roll pin ¼″ x 2″ Part (W-4 plate 2) that holds part (W-5 plate 2). Indexing crank is in position so that drive pin can be driven out. *Before driving out roll pin,* mark with center punch on part (W-6 plate 2) index crank. Match mark on shoulder on gear box above index crank — also mark on top of gear box rim position on Woodruff key way on clutch and gear shaft (To be used in reassembly.)
14. After the above 12 steps are completed, lift out clutch assembly — remove balance of lubriplate from gear box. Do Not destroy spacer washers that are on top of bearing in bottom of gear box or have adhered to clutch and gear shaft. Can be 1 — 2 or more spacer washers plus one ⅛″ thick hardened thrust washer (look out for them) and replace in order removed.
15. Remove clutch roller cage — Part 803. This is the cover for clutch cup.
16. In removing Part 803 (clutch roller cage) it's possible that shaft & clutch cam are still intact. Leaving three ½″ x 1″ dowel pins in clutch cup. Note gear attached to bottom of cup. Check Allen head stud bolt and be sure it is set up very secure. This is gear mentioned in lubrication directions. Lubriplate #105 should be at top of gear and not up on cup. This gear picks up the lubriplate-105 and carries it to worm gear — *Do Not* use too much lubriplate if same gets into cup it will cause clutch slipping. (Reason for dismantling now).
17. *Wash* all clutch parts with kerosene. Let cup soak at least 10 minutes in kerosene. Also (Rollers) — the three ⅛″ x 1″ dowel pins. *Caution* — Wipe all clutch parts absolutely FREE from oil or grease.
18. *To: Reassemble*
    Place — spacer washers in bottom of gear box — on top of ball bearing race. Return cup & gear. Line up hole in cup & gear with spacer washers and bearing hole.
19. Assemble — shaft & cam in clutch roller cup with rollers in place; held in, — (while assembling only), with heavy rubber band. Hold this assembly intact & insert through cup, spacer & washers & bottom bearing.
20. Before inserting this shaft any further in bearing, line up center punch marks (you made on dismantling) on (part W-6 plate 2) indexing crank, with mark on gear box shoulder. *Note* — At this stage you will notice the 3 rollers resting on clutch cup edge. By using ⅛″ long pin punch through top hole in shaft, rotate shaft clockwise (To Right) holding clutch roller cage rigid. Shaft will rotate about ¼″ & allow rollers to be engaged in cup. Remove rubber band & push entire clutch assembly through—(Indexing Crank). Line up holes in shaft, according to center punch marks — on indexing crank also keyway slot with punch mark on gear box edge — drive in roll pin ¼″ x 2″ that was removed. Reassemble step by step, in reverse — *Note:* If for some reason upon

testing, targets fail to feed properly, you have the indexing crank installed 180° off position. To correct, remove bottom roll pin & advance indexing crank 180° or ½ turn & reassemble.

The motor bearings should be lubricated with 20w oil about every six months or just prior to any large shoot.

CAUTION

Use only 15 ampere — 125 volt fuses. The use of larger fuses may cause burning out of motor winding. For the proper operation of the A100T Trap, the wiring system must provide a minimum of 105 volts AC when the motor is started under full load.

BRAKE OR SNUBBER

The purpose of the brake or snubber is not to stop the carrier (throwing arm) but to prevent excessive whip when the arm recoils. The brake or snubber should be set so that when the carrier is released by the safety release switch, the carrier or throwing arm does not vibrate. If too loose, carrier will have excessive vibration or whipping back and forth. Set jam nuts tight enough to remove all vibrating but not over-tight. Too tight will cause excessive brake lining wear. Too loose will cause target breakage. Should be checked every 10 or 15 thousand targets. Very little adjustment is needed to correct.

ITEMS TO LOOK FOR IN MAINTENANCE

A. Check motor support bracket bolts (c) and nuts (c) located on front side of motor. (See plate #1). Make sure these are kept tight at all times.

B. Cause of target breakage.

1. Magazine plate out of adjustment. If Nylock set screw (E plate #1) becomes loose, the magazine plate will have a tendency to slip clockwise causing excessive target breakage. To correct, move magazine plate counterclockwise, not over ¼″ at a time, until target drops freely on carrier (see Fig. C). Reset Nylock set screw. screw.
2. Loose carrier — tighten carrier bolts to correct.
3. Loose rail on carrier.
4. Rough carrier.
5. Target pitch deposit on carrier.
6. Brake out of adjustment.
7. Target stop (I) not aligned with slot in carrier rail.
8. Cracked targets in magazine.
9. Pieces of target lodged under rail.
10. Using uninspected targets in magazine.
11. Target guide rail worn and target is hitting metal binder.

C. Motor hums but doesn't start.

1. Turn pulley on side of gear box. If this is free, starting capacitor (see (O) plate #2) on motor is open, and will have to be replaced with #400 — 480 M.F.D. 125 volts.
2. Motor runs but trap does not operate — check taper pin on inside hub of drive pulley (X).

D. Excessive Fuse Blowing.

1. Solenoid: Check bullet connection underneath solenoid (P plate 2).
2. Capacitor connections shorting out due to vibration against capacitor cage located on top of motor. See (O).
3. Under Fused — Use 15 amp. fuses only.
4. Angling device blocked (bolts extending too far above trap support).
5. Loose or broken connections in power control box.

E. Repeat targets without operation of release unit.

1. Can be caused by target fragments blocking solenoid in actuated or down position.
2. Solenoid return spring broken.
3. Sticking solenoid plunger — not shown.
4. Solenoid link blocked or broken.

F. To release carrier or throwing arm manually — in case of power failure.

1. *Use at least a 12″ heavy screw driver.* Insert between carrier hub (V) and carrier latch extension (T-1). (See plate #3). Pry out until latch and hub disengages. *Caution* — be sure body is out of range when releasing carrier manually.
2. To put trap back in operation or set carrier after releasing manually, the solenoid must be actuated either by pressing release button or pressing down toggle switch on safety release.

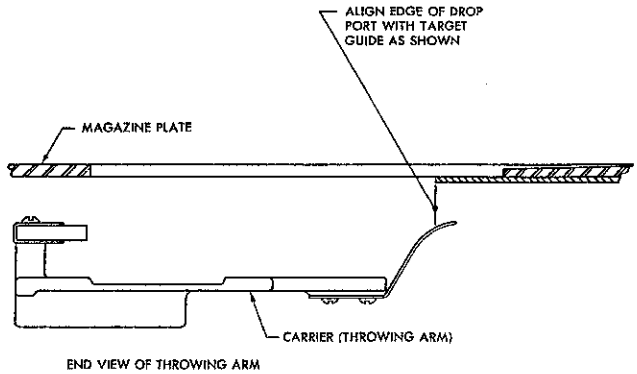

FIGURE C

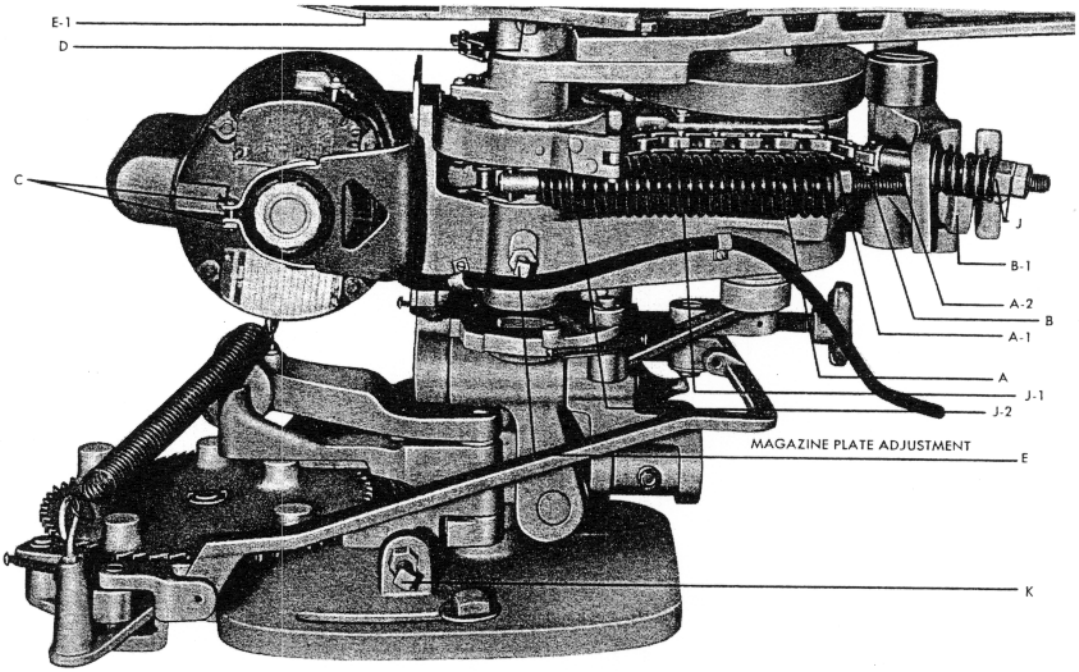

PLATE 1

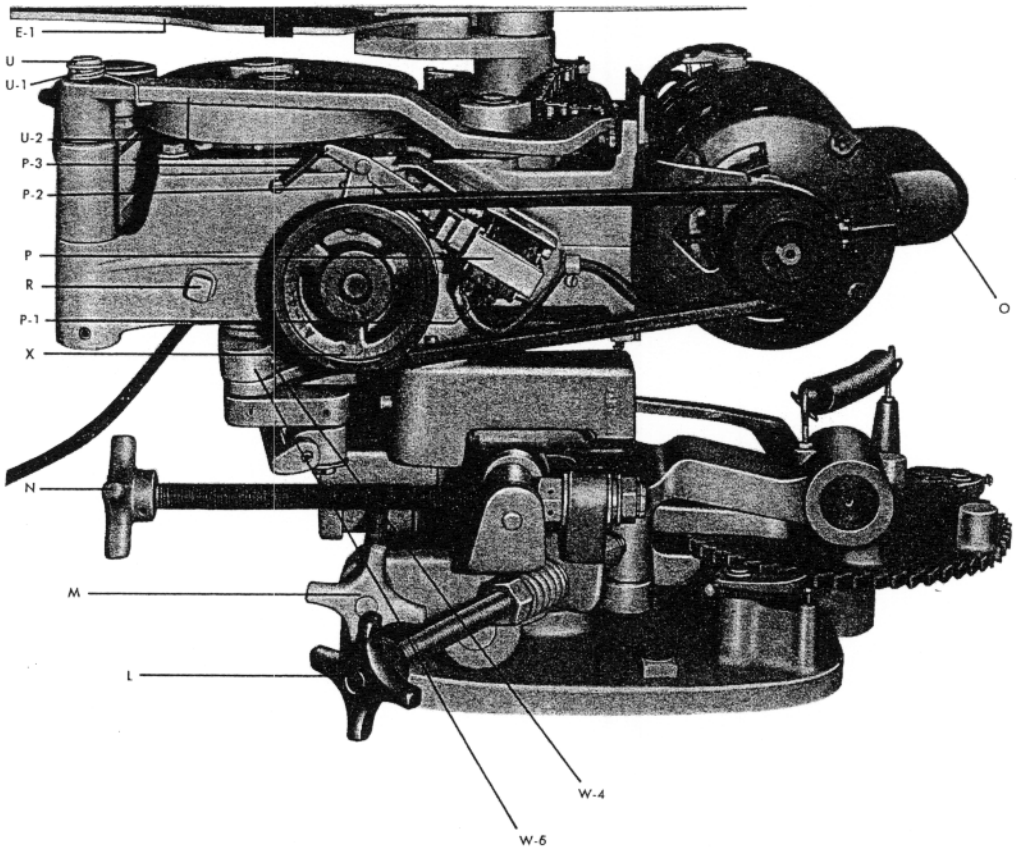

PLATE 2

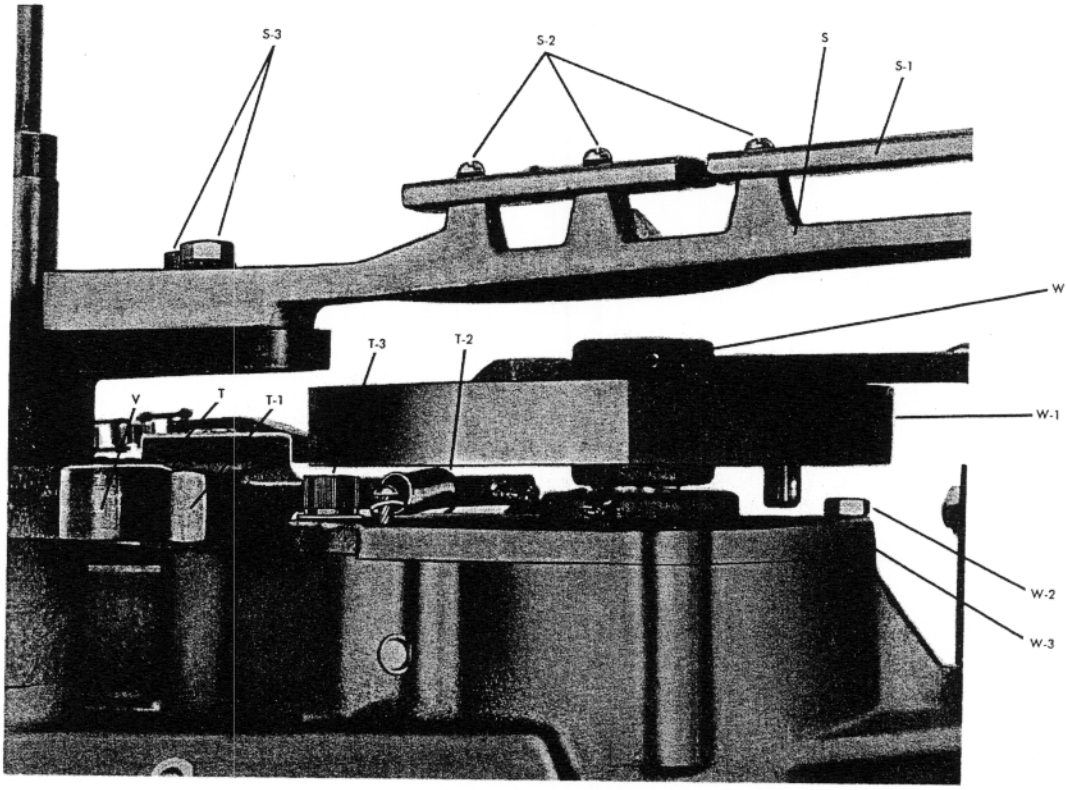

PLATE 3

FOR ALL LETTERED PARTS MENTIONED IN MAINTENANCE SECTION SEE PLATES 1, 2 & 3

A. Main Spring
A-1. Main Spring Lock Nut
B. Main Spring Adjusting Knob & Screw
C. Motor Support Bracket Bolts & Nuts
D. Lock Nut & Stud Bolt
E. Nylock-Set Screw — Mag. Adj.
E-1. Magazine Plate
J. Snubber or Brake Adj. Lock Nuts
J-1. Snubber Chain
J-2. Snubber
K. Left Angle Stop & Adj. — Lock Nut & Stud Screw
L. Right Angle Setting Knob & Screw — Set First
M. Tilt Control Knob & Screw
N. Elevation Control Knob & Screw
O. Starting Capacitor on Motor
P. Solenoid
P-1. Solenoid — Bullet Connectors
P-2. Solenoid and Clutch Control Link
P-3. Solenoid Return Spring
R. Filler Plug
S. Carrier — or Throwing Arm
S-1. Carrier or Throwing Arm Guide Rail
S-2. Carrier Rail — Hold Down Bolts
S-3. Carrier Bolts
T. Carrier Latch
T-1. Carrier Latching Extension
T-2. Carrier Latching Lever Return Spring
T-3. Carrier Latching Stud
U. E Ring
U-1. Relatching Return Spring
U-2. Relatching Arm
V. Carrier Hub
W-1. Roll Pin — Through Cocking Cam
W-2. ⅜″ Gear Box Cap Screw
W-3. Gear Box Cover
W-4. Index Crank Roll Pin
W-5. Cocking Cam
W-6. Index Crank
X. Drive Pulley

REMINGTON MODEL A100T
AUTO LOADING, AUTOANGLING TRAP PARTS LIST
(RIGHT SIDE)

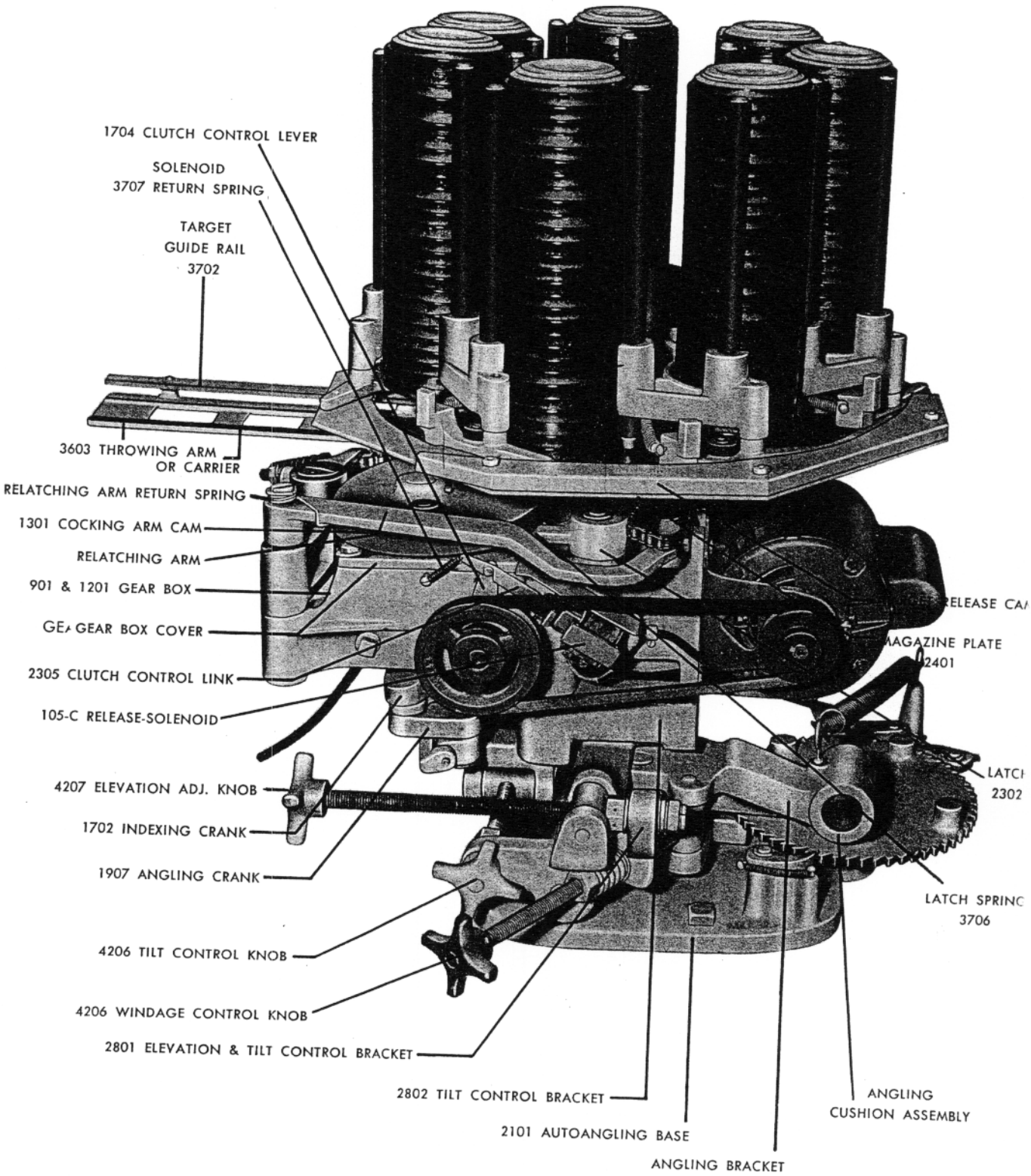

PARTS COMMON TO M200S & A100T

Part Number	Number Required	Description	Price* Per Each F.O.B. Findlay, Ohio
701	1	Indexing Pawl Lever	$ 7.50
702	1	Indexing Pull Rod	2.40
801	1	Clutch Drive Assembly	91.55
803	1	Clutch Roller Cage	10.50
804	1	Clutch Cam	79.00
805	1	Clutch and Gear Shaft	7.50
806	1	Clutch Spring	.60
901 & 1201 Assembled	1	Gear Box	62.30
1102	1	Index Ratchet	2.70
1101	1	Index Plate Cam	9.00
1103	1	Index Ratchet Stop Pawl	3.00
1202	1	Cocking Arm	9.00
1301	1	Cocking Arm Cam	14.80
1303	1	Spring Swivel	3.00
1308	1	Indexing Pull Rod Stud	2.10
1310	1	Front Target Stop	1.10
1312	1	Rear Target Stop	.80
1402	1	Index Plate Flange	9.00
1605	1	Crank Link Pin	1.20
1702	1	Indexing Crank	3.00
1703	1	Clutch Throwout Stop	4.50
1704	1	Clutch Control Lever	3.00
1705	1	Drive Shaft	2.40
1706	1	Clutch Control Shaft	1.20
1901	1	Carrier Hub	30.45
1903	1	Hollow Shaft	16.05
1906	1	Bearing	150
2001	1	Elevation Control Shaft	2.40
2006	1	Throwing Spring Chain	2.10
2008	2	Spring Swivel Stud	.90
2009	1	Latch Stud*	1.20
2302	1	Latch	16.00
2305	1	Clutch Control Link	2.70
2401	1	Magazine Plate	36.00
2503	1	Target Guide, on Carrier	.80
2601	1	Carrier Latching Lever	12.50
2602	1	Snubber	13.00
2603	1	Cocking Arm Stud	4.50
2604	1	Carrier Latching Lever Return Spring	.90
2606	1	Magazine Shaft Stop Collar	1.50
2607	1	Snubber Clevis	3.75
2608	1	Cam Follower	4.50
2701	1	Elevation Control Bracket	24.00
2703	1	Tilt Control Pivot	1.50
2704	1	Elevation Control Pivot	1.50
2710	3	Position Control Block	5.25
2801	1	Elevation and Tilt Control Bracket	24.00
2802	1	Tilt Control Bracket	24.00
3505	1	Power Control Box Nameplate (Incl. in 3505A)	.90
3505A	1	Power Control Box	60.00
3601	1	Clutch Throwout Stop Spring	.60
3701	1	Solenoid Cover	.35
3704	1	Magazine Post	4.50
3706	1	Latch Spring	.80
3707	1	Solenoid Return Spring	.35
4102	7	Target Support Roller	.40
4103	7	Magazine Rod	3.75
4105	14	Magazine Rod	3.75
4107	14	Magazine Rod Sleeve	.30
4108	7	Target Bumper Pivot	.90
4109	7	Magazine Finger Pivot	.90
4110	7	Magazine Finger Spring	.50
4111	7	Magazine Finger	3.75
4112	14	Magazine Rod Sleeve	.90
4113	7	Magazine Rod Sleeve	.80
4201	1	Front Spring Plug	2.00
4202	1	Rear Spring Plug	1.50
4204	1	Throwing Spring	3.00
4301	1	Magazine Base	180.00
4300	1	Throwing Spring Assembly (4201 — 4202 — 4204)	6.50
3401	1	Belt Guard	17.60*
4206	2	Windage and Tilt Adjustment Knobs	4.50
4207	1	Elevation Adjustment Knob	3.75
4203	1	Throwing Spring Adjustment Knob	5.25

*Prices subject to change without notice.

PARTS FOR M200S ONLY

Part Number	Number Required	Description	Price* Per Each F.O.B. Findlay, Ohio
606	1	Pawl	1.50
2501	1	Carrier	8.60
2502	1	Target Guide Rail	2.40
2901	1	Skeet Base	27.00
3504	1	Connection Box	7.50
3602	per outfit 1	Skeet Release Housing	Sold as Assembly only.
3605	per outfit 1	Release Housing Cover	15.00
3606	per outfit 2	Release Operating Finger	
3705	per outfit 1	Pawl Spring	.30
5000	1	Autoangling Assembly Complete (Refer to Page 5 for converting M200S to A100T Autoangling)	640.00
2706	1	Support Shaft	2.40

PARTS FOR A100T ONLY

Part Number	Number Required	Description	Price* Per Each F.O.B. Findlay, Ohio
601	1	Autoangling Ratchet Wheel	11.00
602	1	Autoangling Pawl Lever	16.35
603	1	Pawl Lever Stud	2.75
606	3	Pawl	1.50
1309	1	Angling Spring	.90
1311	1	Doubles Target Holder	1.10
1601	1	Autoangling Pull Rod	14.75
1604	1	Angling Pivot Block Crank Link	3.75
1707	1	Pivot Block Crank Link Pin	1.50
1904	1	Angling Crank Gear	3.75
1907	1	Angling Crank	2.40
2003	1	Autoangling Pawl Stud	1.50
2004	2	Stop Pawl Stud	1.50
2101	1	Autoangling Base	38.00
2103	1	Angling Pull Rod Clevis	5.25
2104	1	Angling Pull Rod Pivot Block	3.75
2303	1	Angling Pull Rod Clevis Stud	.90
2605	1	TV Standoff	.25
2705	1	Angle Control Pivot	1.80
3603	1	Carrier	9.00
3702	1	Target Guide Rail	2.90
3705	4	Pawl Spring	.30
3801	1	Angling Lever	37.60
3802	1	Bumper Pivot Shaft	.90
3901	1	Angling Bumper	14.75
3902	1	Cylinder Sleeve	9.00
3903	1	Piston Guide	2.40
3904	1	Piston Rod	2.40
3905	1	Piston Return Spring	.50
3906	1	Piston Rod Seal	.50
4208	1	Spacer	.90

REMINGTON MODEL A100T
AUTO LOADING, AUTOANGLING TRAP PARTS LIST
(LEFT SIDE)

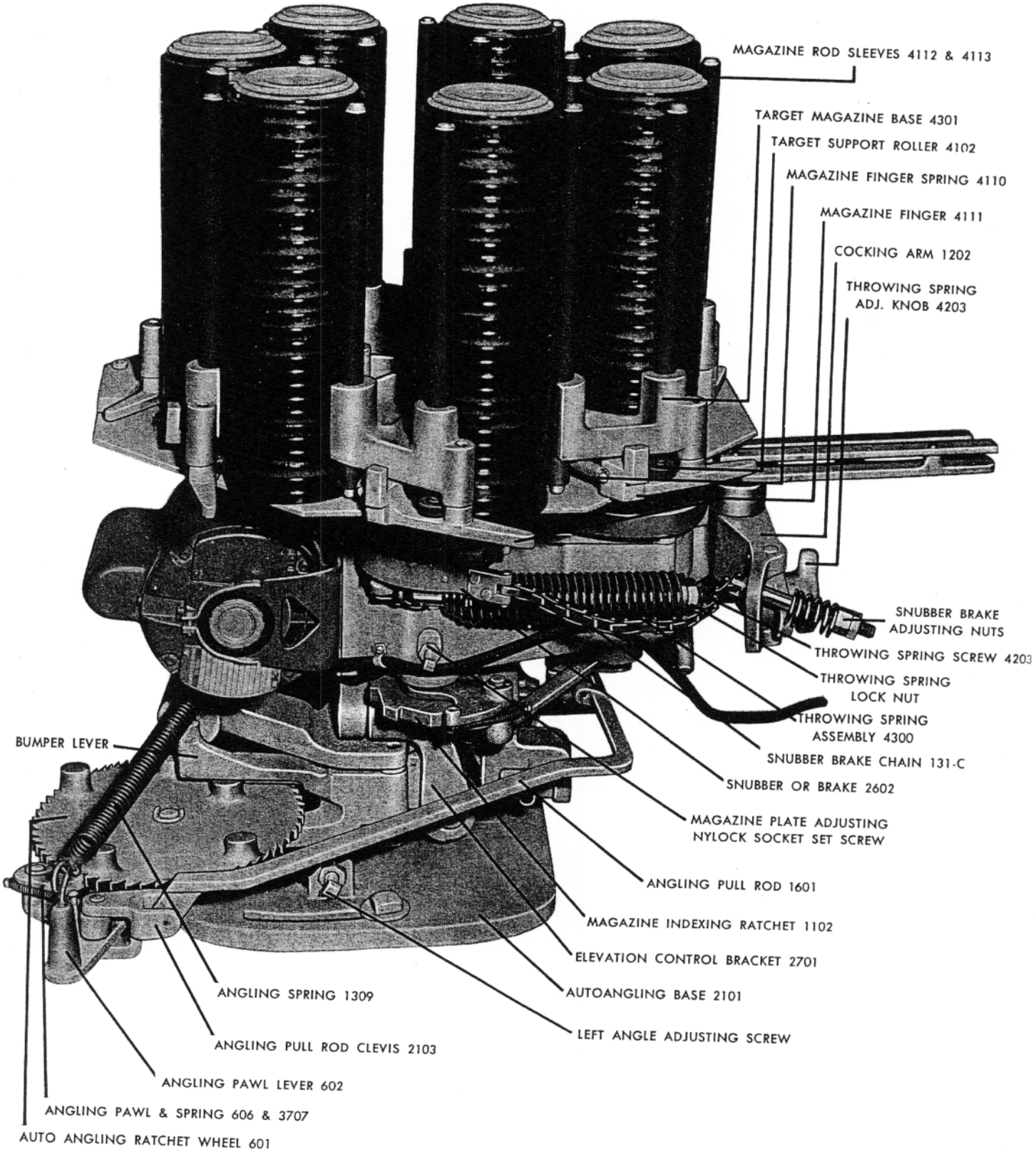

COMMERCIAL PARTS AVAILABLE AT HARDWARE, AUTO, MILL, OR ELECTRICAL SUPPLY STORES COMMON TO M200S & A100T

Part Number	Number Required	Description	Price* Per Each F.O.B. Findlay, Ohio
101-C	1	General Electric ½ HP, 115 Volt AC, 1725 RPM General Purpose, Capacitor Start, Resilient Base #5KC43MG3, ⅝ Dia. Shaft	66.10
104-C	1	Gates A31 V-Belt	2.10
105-C	1	Dormeyer Constant Duty, 2000 Series, C.T. Design, Solenoid, 110 V AC, ¾ Stroke, ¾ Stack, Pull Type, Spec. #230-3SP with Bullet Terminals	
10-C	2	Producto Oval Wire Spring #OW-36	1.20
21-C	1	Truarc Retaining Ring #5000-200	.50
106-C	14	Truarc Retaining Ring #5133-25	.15
107-C	8	Truarc Retaining Ring #5133-37	.15
13-C	1	Truarc Retaining Ring #5100-100	.15
	1	Flexloc Nut, Thin, Commercial Type, Cat. #31FK-1011	.35
108-C	1	Truarc Ring #5100-37	.15
25-C	1	Truarc Retaining Ring #5133-50	.15
42-C	1	Truarc Retaining Ring #5133-75	.35
31-C	2	Truarc Retaining Ring #5108-137	.35
131-C	19½"	Boston 1" Pitch Block Chain #504B and 2 Conn. Links	5.00
120-C	1	½ NPT Square Head Plug	.35
1903½		Repair Links for Boston 1" Pitch Block Chain #504B	.25
19-C	1	Boston Unground Thrust Brg. #607 ¾ ID x 1 21/32 OD x 35/64 Thk.	1.20
20-C	2	Boston Unground Radial Ball Brg. #3041 DS 1 ID x 2 OD x 9/16 Thk.	3.75
16-C	1	Boston Hdn. & Gnd. Stl. Washer 1 ID x 1 9/16 OD x ⅛ Thk.	2.40
17-C	1	Boston Steel Worm #GH1076, 8 Pitch, Single Thread, RT. Hand 1½ PD x 1¾ Face x ¾ Bore	8.00
18-C	2	Boston Bronze Brg. #B-1215-6 ¾ ID x 15/16 OD x ¾ Long	.60
29-C	2	Boston Bronze Brg. #B-2226-12 1⅜ ID x 1⅝ OD x 1½ Long	1.50
111-C	1	Oilite Brg. AA-507-3, ⅜ ID x ½ OD x ⅞ Lg.	.60
112-C	1	Oilite Brg. AA-507-19, ⅜ ID x ½ OD x ¼ Lg.	.50
113-C	1	Oilite Brg. AA-1108-1, ⅞ ID x 1⅛ OD x 1 Lg.	.90
114-C	1	Oilite Brg. AA-1011-13, ⅝ ID x 1 OD x 1⅜ Lg.	1.50
801	2	Oilite Brg. AA-1118-6, 15/16 ID x 1 3/16 OD x ⅞ Lg.	1.50
116-C	7	Oilite Brg. AA-307-9, ¼ ID x ⅜ OD x ⅜ Lg.	.15
11-C	5	Parker Kalon Drive Screw, Type U, #10 x ⅝ Lg.	.15
1202	1	McGill Cam Follower #CF2	4.50
117-C	1	Shakeproof Internal Tooth Lockwasher, Type 12 Cat. #1224	.15
118-C	1	Gits Oiler #301	.60

*Prices subject to change without notice.

Part Number	Number Required	Description	Price* Per Each F.O.B. Findlay, Ohio
125-C	10 Ft.	Wire Neoprene Covered Cable Type SJO 4-Conductor #16	.60/ft.
126-C	2	Lynn Solderless Terminal #C-3202 (For 16-14 AWG Wire)	.15
119-C	1	½ NPT Square Hd. Plug	.20
121-C		Toggle Switch	
123-C	14	Shakeproof Plasti-Ring for 7/16 Dia. Shaft	.15
26-C	1	Neoprene "O" Ring 9/16 ID x ¾ OD x 3/32 Dia. Durometer 50-60	.50
121-C	1	Minnesota Rubber & Gasket Co. "Q" Ring #6227-Q19 1 ID x 1¼ OD x ⅛ Thk.	.50
15-C	2	Woodruff Key #11	.15

COMMERCIAL PARTS M200S ONLY

	1	Skeet Trap Only	
	per outfit	Browning Single Groove V-Belt Pulley #AK25 (2.30 PD) with ⅝ Bore and 3/16 x 3/32 Keyway	1.30
40-C	2	Hubbell Twist-Lock 4 — Wire Polarized Cap #9967	3.00
	1	Browning Single Groove V-Belt Pulley #AK46 (4.2 PD) with ¾ Bore	1.80
	2	V3-23 Micro Switch	1.50
	80 Ft.	Neoprene Jacketed Portable Cord, Type SJO, Spec. SI-53162 #18 Wire, 4 Conductor	.20/ft.
3501	1	Insulated Type Gripmaster Strain Relief #6 (For ⅜ Dia. Cable)	.15
	1	13" x 9" Clipboard	.75
	1	Weckesser Nygrip Cable Clip #⅜-3	.35

COMMERCIAL PARTS A100T ONLY

602	6	Autoangling Trap Only	
606, 2101		Parker Kalon Drive Screw, Type U, #10 x ⅝ Lg.	.15
47-C	1	Truarc Retaining Ring #5133-75	.35
25-C	3	Truarc Retaining Ring #5133-50	.15
127-C	1	Truarc Retaining Ring #5000-150	.35
128-C	1	Boston Bronze Brg. B79-5, 7/16 ID x 9/16 OD x ⅝ Lg.	.60
51-C	2	Oilite Brg. #A1213, 1 ID x 1¼ OD x 2 Lg.	1.20
52-C	1	15/16 Dia. Hon. Stl. Ball	1.00
40-C	1	Hubbell Twist-Lock 4-Wire Polarized Cap #9967	3.00
45-C	1	1AH2 Micro-Switch	2.75
129-C	100 Ft.	Type SJO, 2 Conductor #18 Wire Cable Si. Constr. #53-162	.20/ft.
130-C	1	Johns-Manville Packing Cup #S5017	1.50
102-C	1	Browning Single Groove V-Belt Pulley #AK28 (2.6 PD) with ⅝ Bore and 3/16 x 3/32 Keyway	1.30
103-C	1	Browning Single Groove V-Belt Pulley #AK44 (4.0 PD) with ¾ Bore	1.80
132-C	2	504 Block B Chain	5.25

REMINGTON MODEL 200S
AUTO LOADING TRAP FOR SKEET SHOOTING
(RIGHT SIDE)

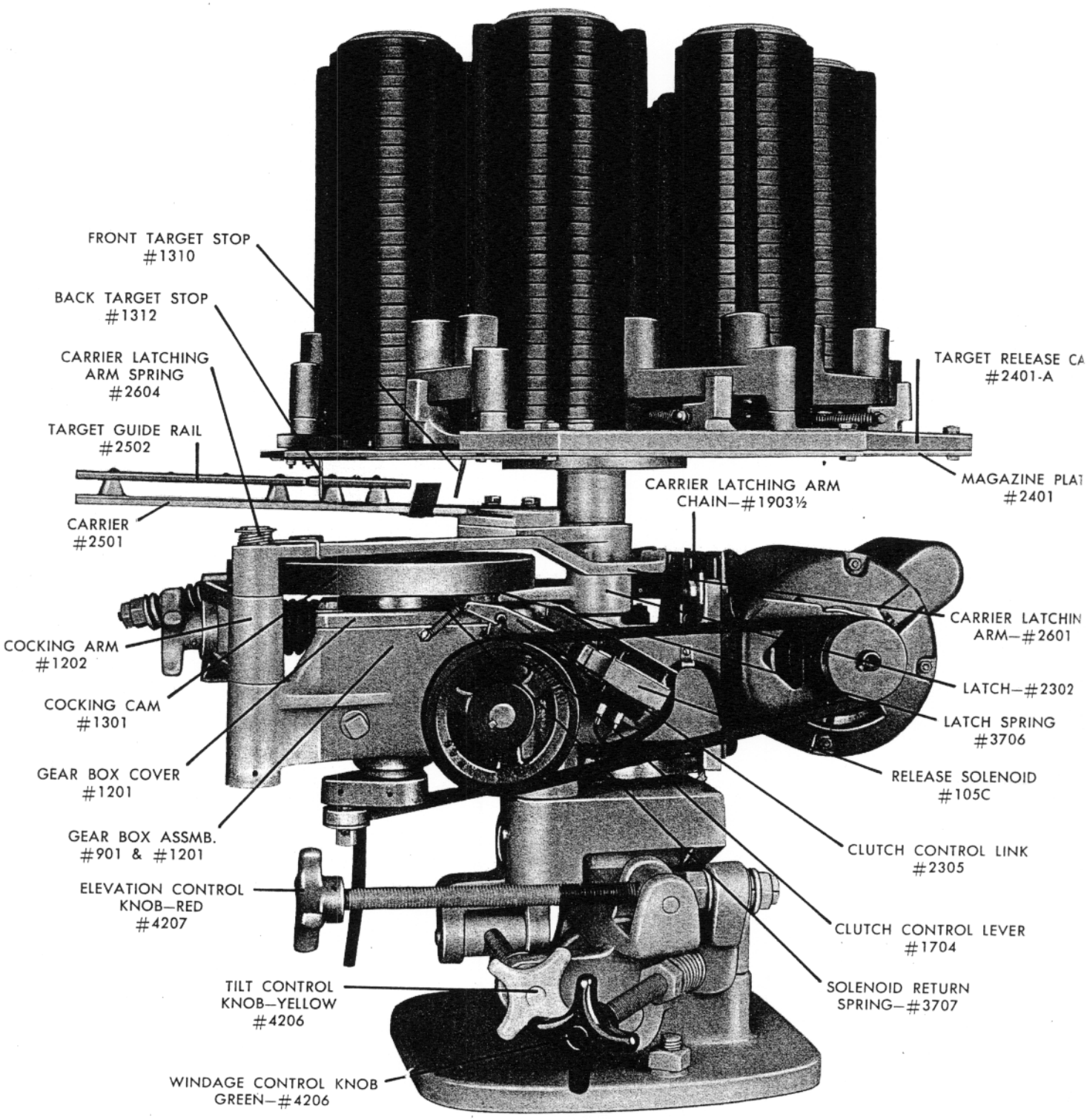

REMINGTON MODEL 200S
AUTO LOADING TRAP FOR SKEET SHOOTING

(LEFT SIDE)